PCB Designing
1st sem

By
Prof. A.P.Malode
Assistant professor, Department of Electronics and Telecommunication
J.D. College of Engineering,Nagpur

Syllabus

Program:B.Tech in Electronics and Telecommunication Engineering

Semester	Course Code	Name of the course	L	T	P
I SEM		PCB DESIGNING	1	-	2

Prerequisites for the course	
1	Basic knowledge of electronic components and circuits.
2	Ability to read and interpret circuit diagrams.

Prior Reading Material/useful links	
1	https://www.nielit.gov.in/chennai/sites/default/files/Chenna 5.pdf
2	https://resources.altium.com/p/how-to-become-a-pcb-desig s-world

Unit-I	**Introduction to Printed circuit board:** Fundamental of electronic components, basic electronic circuits, Basics of printed circuit board designing: Layout planning, general rules and parameters, ground conductor considerations, thermal issues, check and inspection of artwork. **[4 Hours]**
Unit-II	**Electronic design automation (EDA) tools for PCB designing** Brief Introduction of various PCB designing software like EAGLE,KICAD,ORCAD, Selecting the Components Footprints as per design, Making New Footprints, Assigning Footprint to components, Net listing, PCB Layout Designing, Auto routing and manual routing. **[6 Hours]**
Unit-III	**Printed circuit board production techniques** **Photo printing, film master production, reprographic camera, basic process for Single/double sided PCBs photo resists, Screen printing process, plating, relative performance and quality control, Etching machines and material(chemicals) required , Solders alloys, fluxes, soldering techniques, Mechanical operations.** **[5 Hours]**

Unit-I

Introduction to Printed circuit board

Fundamental of electronic components

Electronic components are the basic building blocks of electronic circuits and devices. They perform various functions within a circuit, such as amplifying signals, storing data, or controlling the flow of electricity. Understanding these fundamental components is essential for anyone working with electronics. Here are some of the most common electronic components.

Resistor (R)

- Resistors are passive components that restrict the flow of electrical current. They are often used to control voltage levels, limit current, or divide voltage in a Resistor (R) circuit. The unit of resistance is the ohm (Ω).
- symbol

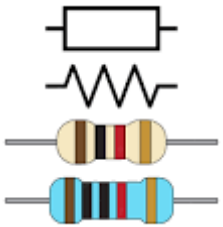

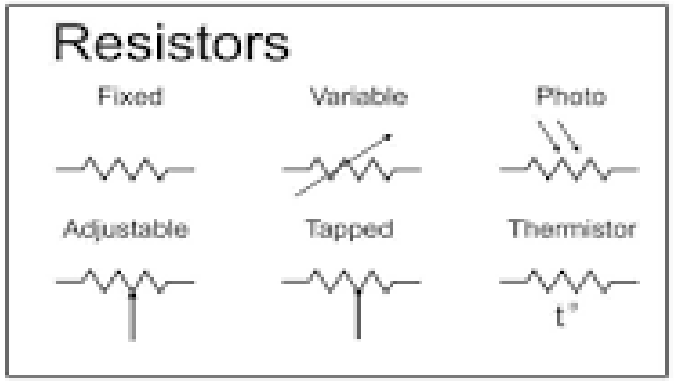

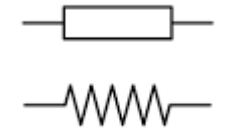

Images of Resistor

Capacitor (C)

Capacitors store electrical energy in an electric field. They are used for various purposes, including smoothing out voltage fluctuations, filtering signals, and timing circuits. Capacitance is measured in farads (F).

symbol

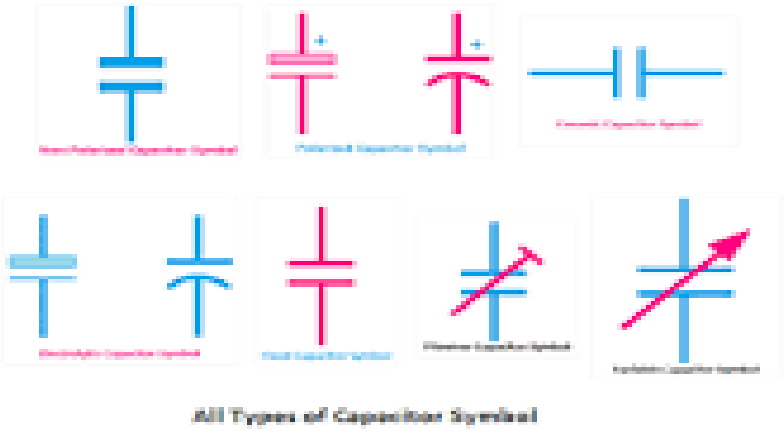

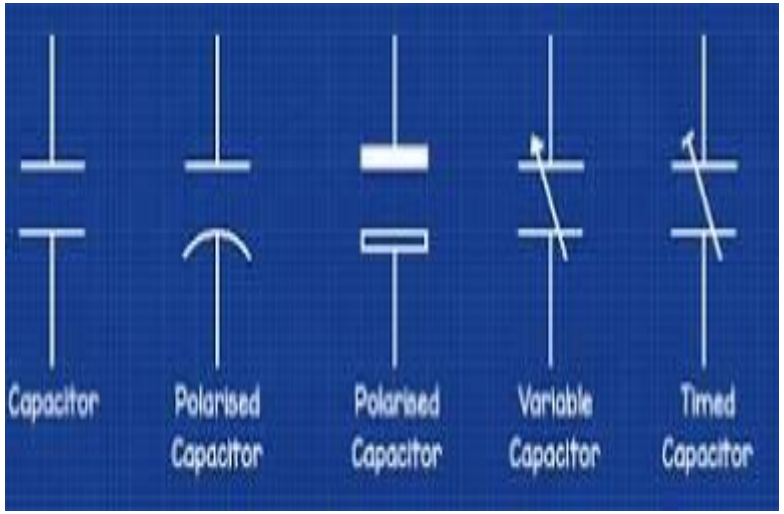

Images of capacitor

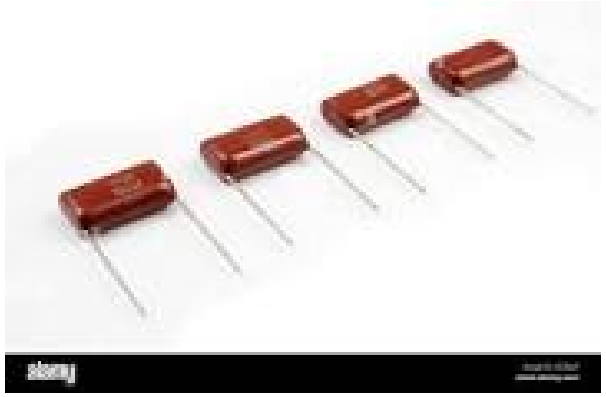

Inductor (L)

- Inductors store energy in a magnetic field. They resist changes in current flow and are commonly used in applications like filtering, tuning, and power supply design. Inductance is measured in henrys (H).

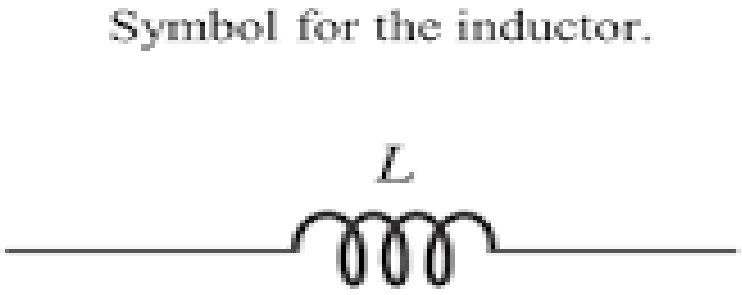

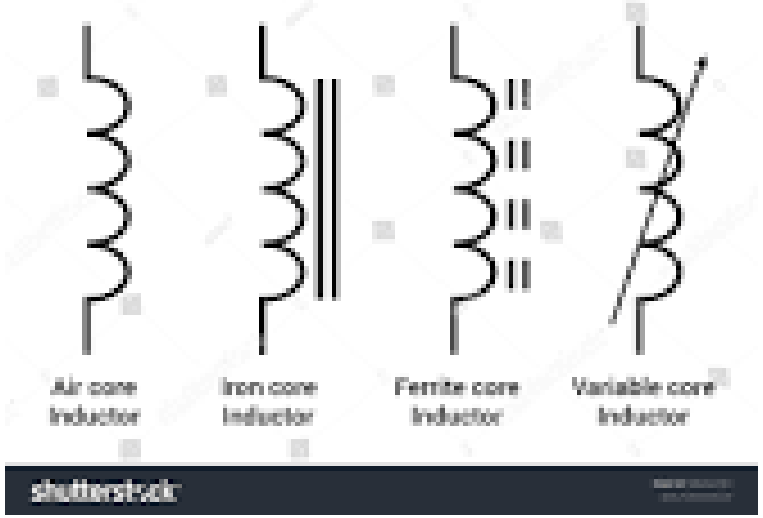

Images of inductor

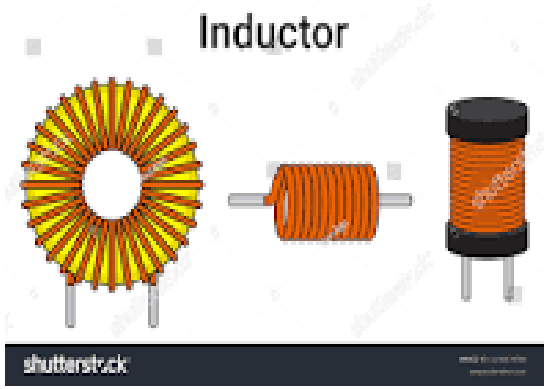

Diode

Diodes are semiconductor devices that allow current to flow in one direction only. They are often used for rectification (converting AC to DC), voltage regulation, and protection against reverse voltage.

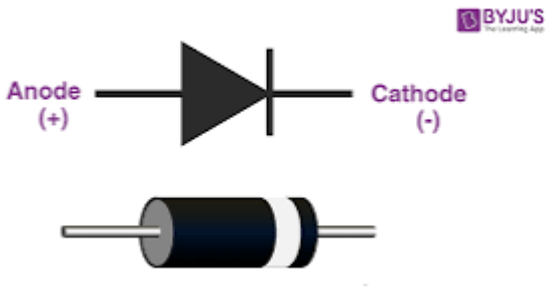

symbol

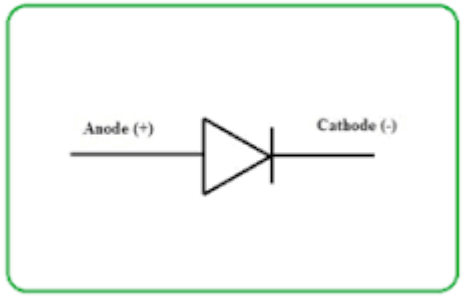

Images of Diode

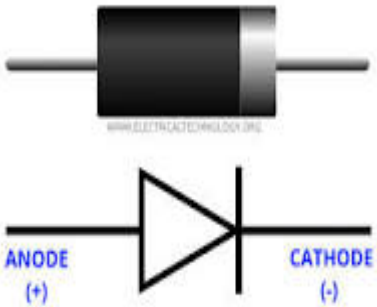

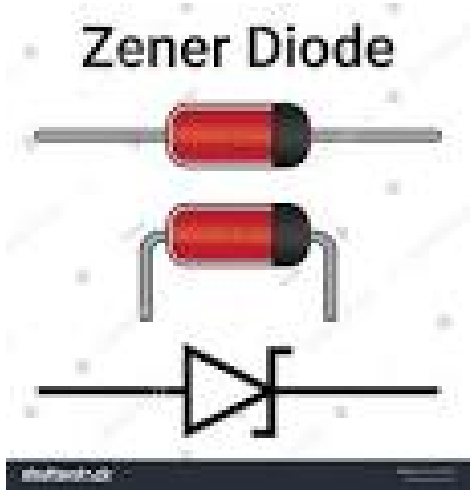

Transistor

Transistors are active semiconductor devices that can amplify or switch electronic signals. There are two primary types: bipolar junction transistors (BJTs) and field-effect transistors (FETs). Transistors are essential for amplification and digital logic operations.

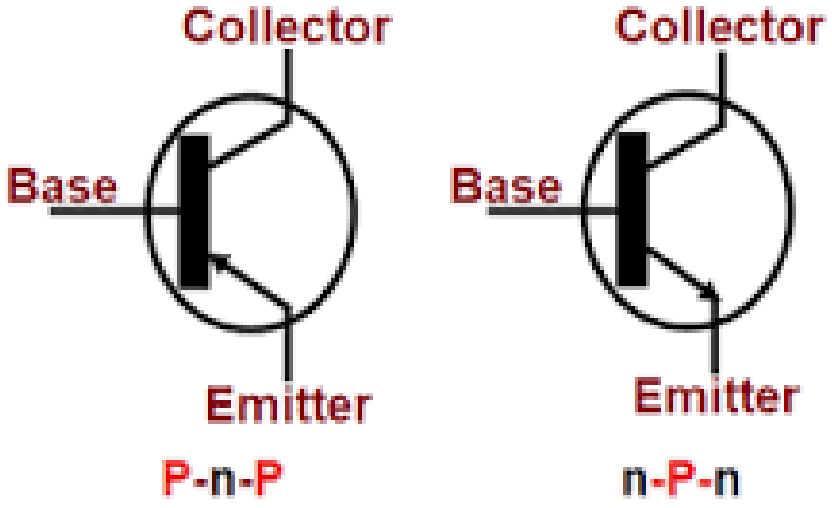

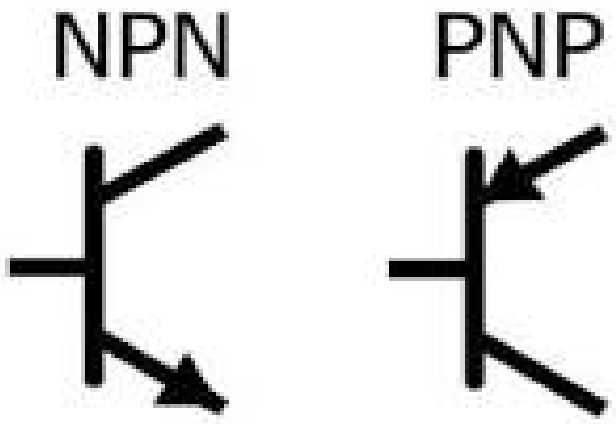

Images of transistor

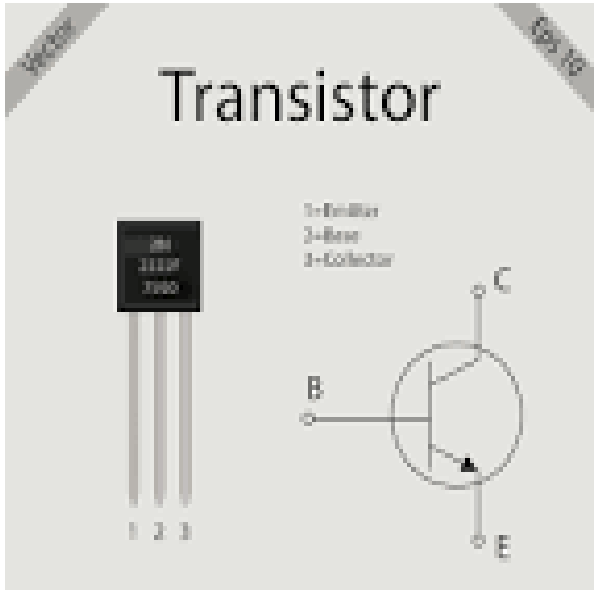

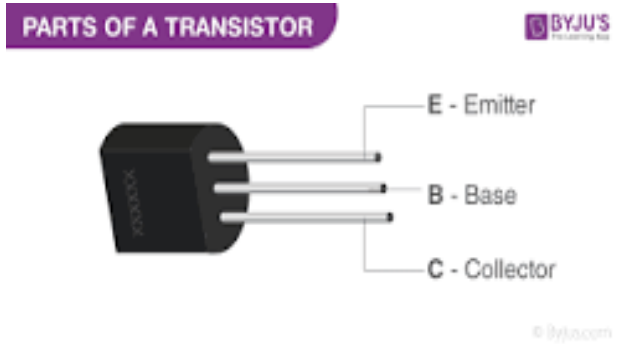

Integrated Circuit (IC)

- Function: Contains multiple electronic components (transistors, resistors, capacitors, etc.) on a single chip. ICs perform various functions like amplification, signal processing, and logic operations.
- Types: Analog ICs, digital ICs, microcontrollers, microprocessors.

Images of ICs

Voltage Regulator

- Function: Maintains a constant output voltage regardless of input voltage fluctuations. It's commonly used to provide a stable voltage supply to other components.

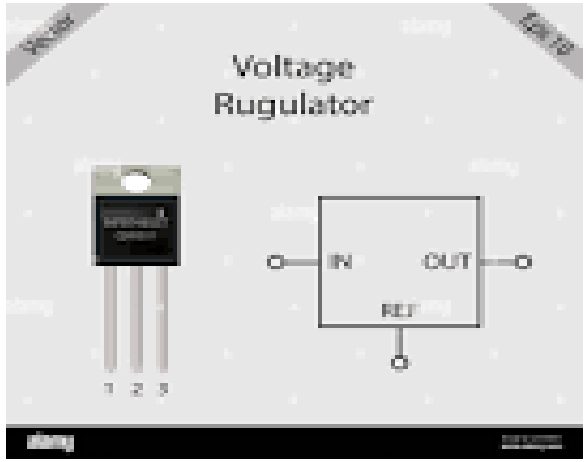

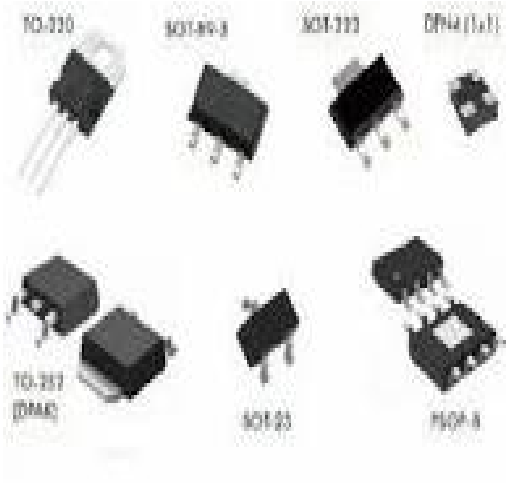

Basic Electronics circuit

- Electronic circuits are the building blocks of virtually all electronic devices,
- from simple gadgets like flashlights to complex systems like computers and smartphones.
- They are composed of various electronic components that work together to perform specific functions. Here are the basics of electronic circuits:
- Components, Voltage, Current, Resistance, Power

Circuit Diagrams

- Circuit Diagrams: Engineers and designers use circuit diagrams or schematics to represent electronic circuits visually. Symbols are used to represent components, and lines show the connections between them.
- Digital vs. Analog Circuits: Circuits can be categorized as digital or analog. Digital circuits process discrete values (0s and 1s) and are prevalent in computers and digital devices. Analog circuits deal with continuous signals and are used in applications like amplification and audio processing.

LED Flasher Circuit

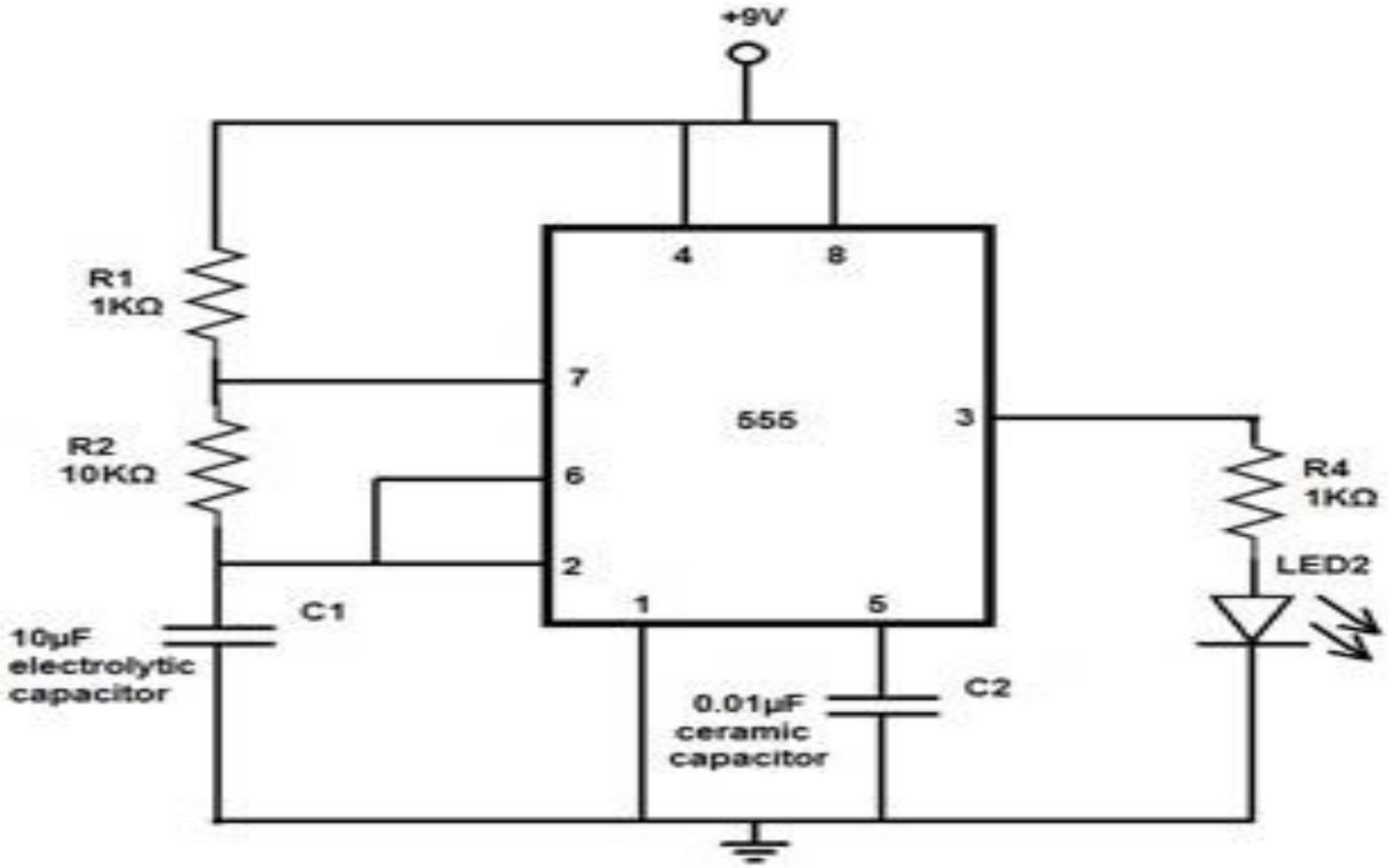

Invisible Burglar Alarm

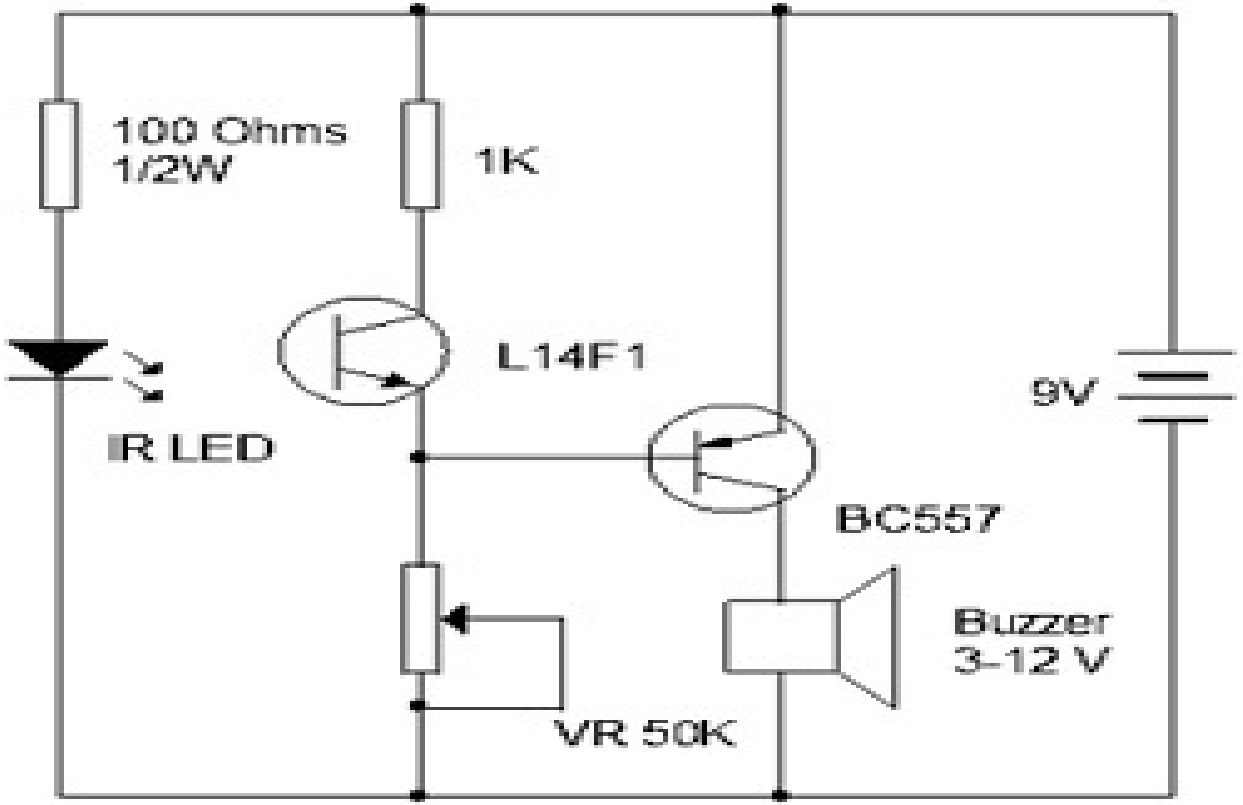

Bistable multivibrator

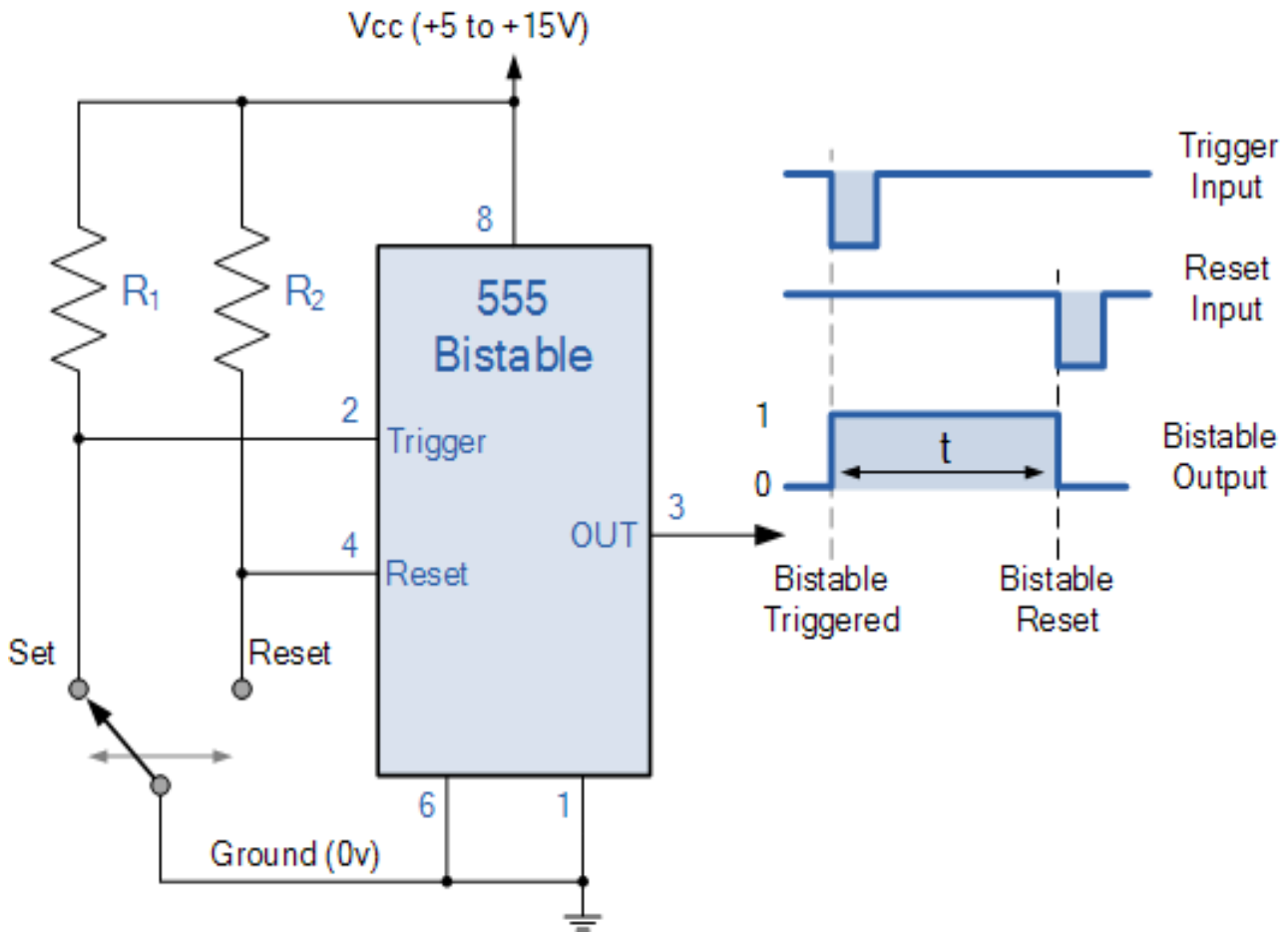

5V Power Supply Circuit Diagram

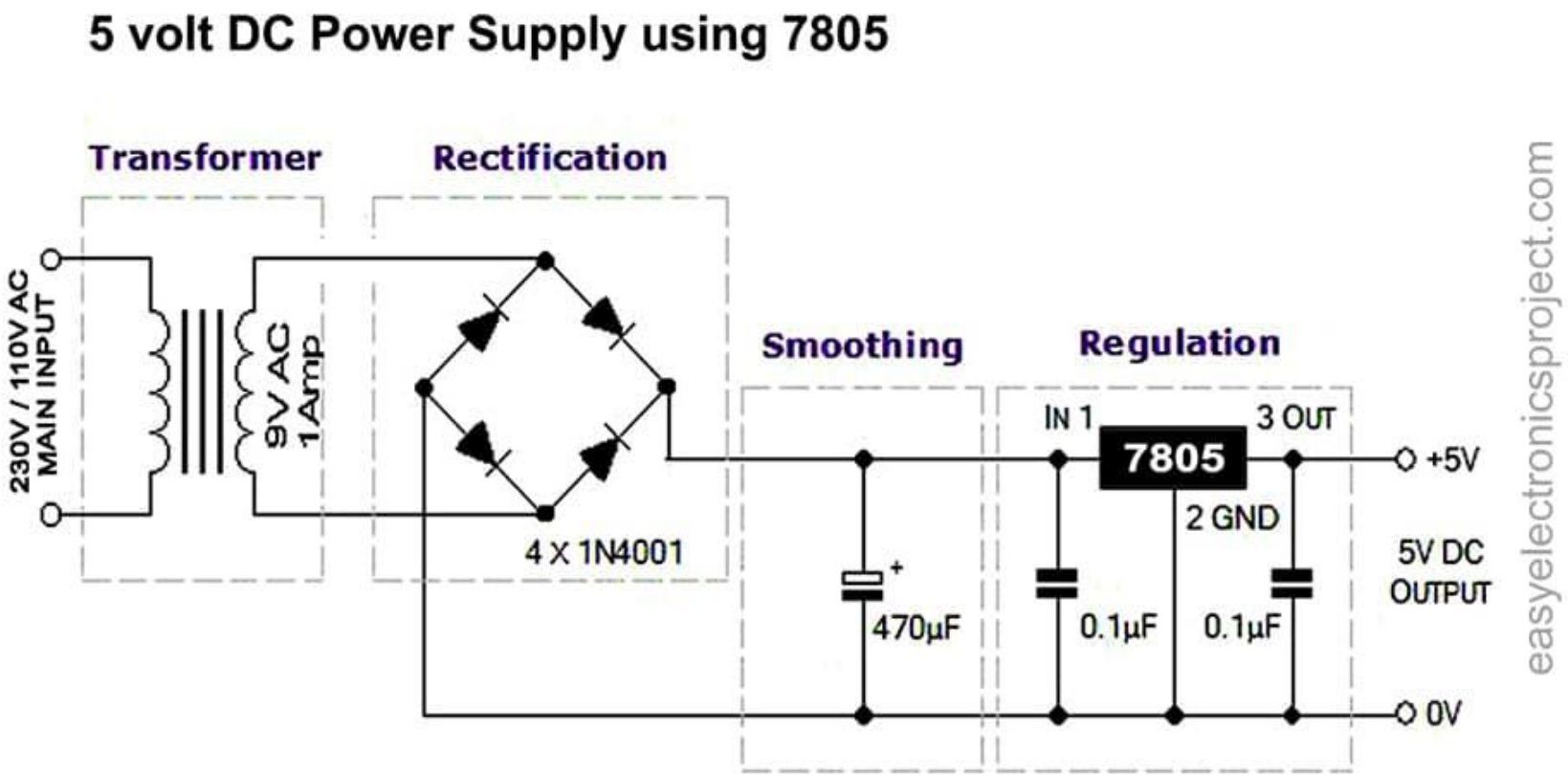

easyelectronicsproject.com
Circuit | Code | Working

What is PCB?

- A PCB, or Printed Circuit Board, is a fundamental component in modern electronics. It is a flat board made of a non-conductive material, typically fiberglass or epoxy, on which electronic components are mounted and interconnected using conductive pathways etched or printed onto the board's surface.

- PCBs serve as a platform for assembling and connecting various electronic components to create functional electronic circuits. Here are some key aspects of PCBs:

- Conducting Layers: PCBs typically have one or more conducting layers, usually made of copper, that are laminated onto the non-conductive substrate. These copper layers are etched or printed with a pattern that defines the electrical connections between components.
- Components: Electronic components such as resistors, capacitors, diodes, transistors, integrated circuits (ICs), connectors, and more can be mounted onto the PCB. These components are soldered onto the copper traces to form electrical connections.

- Traces and Pads: Copper traces are the thin lines on the PCB that carry electrical signals between components. Pads are flat, circular areas where components are soldered to the board. Traces connect these pads to create the desired electrical connections.

- Via Holes: To create connections between different layers of a multi-layer PCB, via holes are used. These are small holes filled with conductive material that allow electrical signals to pass through from one layer to another.

- Silkscreen: PCBs often have a silkscreen layer, which is used for labeling components, indicating component values, and providing other useful information to assembly and repair personnel.

- Mounting Holes: Mounting holes are typically included in PCB designs to facilitate the attachment of the board to a chassis or enclosure.

- Schematic Design: Before creating a PCB, engineers and designers typically create a schematic diagram that represents the electrical connections and components' relationships. This schematic serves as the blueprint for the PCB layout.

- Manufacturing Process: PCBs are manufactured through a process that involves etching or printing the copper traces onto the board, drilling holes for components and vias, and soldering components in place. Advanced techniques, such as surface-mount technology (SMT) and automated assembly, are commonly used in modern PCB manufacturing.

- Types of PCBs: PCBs come in various types, including single-sided (with components on one side), double-sided (with components on both sides), and multi-layer (with multiple conducting layers sandwiched together). Multi-layer PCBs are common in complex electronic devices.

- Applications: PCBs are used in a wide range of electronic devices, from simple household gadgets and appliances to complex systems like computers, smartphones, medical devices, automotive electronics, and industrial equipment.

Layout planning

- Layout planning is strategic arrangement of electronic components, traces, vias, and other elements on the PCB's surface to optimize functionality, signal integrity, thermal performance, manufacturability, and reliability. It's a critical phase in the PCB design process that requires careful consideration of various factors. Here's an overview of layout planning in PCB design:

Component Placement

- Component Placement: The first step in layout planning is to decide where each electronic component will be located on the PCB. Considerations include the relationships between components, their proximity to connectors and other interfaces, and thermal management. Placing critical components in strategic positions can reduce signal interference and improve overall performance.

- Signal Integrity: High-frequency and sensitive signals require special attention. Trace lengths, spacing, and routing should be carefully planned to minimize signal distortion, crosstalk, and electromagnetic interference (EMI). Differential pairs should be routed in close proximity with equal trace lengths.

- Power Distribution: Proper power distribution is crucial to ensure that all components receive the necessary voltage and current without voltage drops or noise. Decoupling capacitors should be placed close to power pins of integrated circuits to filter out high-frequency noise.

- Thermal Management: Components that generate heat, such as CPUs and power amplifiers, should be strategically placed to facilitate heat dissipation. Thermal vias and copper pours can be used to dissipate heat away from sensitive components and ensure the PCB operates within safe temperature limits.

- Mechanical Constraints: Consideration of the mechanical aspects of the PCB is important, especially if it needs to fit within a specific enclosure or mechanical assembly. Ensure there is enough clearance for connectors, heatsinks, and other mechanical components.

- Manufacturability: The layout plan should take into account the capabilities of the PCB manufacturing process. Components should be spaced to accommodate the pick-and-place machines used in automated assembly. Properly defined design rules, such as minimum trace widths and clearances, should be followed.

- Ergonomics and Accessibility: If the PCB will be accessed or serviced by humans, consider the ease of access to connectors, test points, and adjustment potentiometers.

- Grounding and Ground Planes: Establishing a solid ground plane and planning for proper grounding is essential to minimize noise and ensure a stable reference for signal and power circuits.

- Signal Routing: After component placement, carefully route the traces to connect all components while adhering to design rules and signal integrity considerations. Use different layers of the PCB, vias, and routing techniques like differential pair routing as needed.

- Documentation: As part of the layout planning, create clear and comprehensive design documentation, including silkscreen labels, reference designators, and assembly notes. This documentation is crucial for manufacturing, assembly, and future troubleshooting.